30W, 100-277Vac Input, Dimmable Constant Voltage LED Driver

Product Datasheet

The global certified BSR-030-V series is a dual stage high efficiency smart LED driver. The super slim form factor eases light box designs. 2% minimum level and high frequency PWM output provides strobe flicker free user experience. 100khour long life and 7-year warranty provide high confidence to luminaire designers and users. All around protections including digital OTP, SCP and OCP with auto-recovery secure 24hour non-stop operation for luminaires.

☑ Strip ☑ Light box ☑ Signage

- Features 2
- Model List 2
- Technical Data 3
- Safety/EMC Compliance 4
- Dimming 4
- Lifetime vs. Case Temperature 6
- Power Factor vs. Load 6
- THD vs. Load 7
- Efficiency vs. Load (24V Model) 7
- Dielectric Strength 8
- Tc Point 8
- Packaging Information 8
- Mechanical Design 9
- Revision History 10

Features

- Supply Voltage: 90-305Vac or 127-250Vdc
- 100,000Hour Life @ Tc=75C
- PWM Output Frequency >1kHz
- 7 Year Warranty
- 2% 0-10V/PWM/Time/DALI2.0 Dimmable (0.1% Optional)
- Low Inrush Current
- Class II (Optional)
- UL Class P, Class 2
- ENEC/CB/CCC SELV Output
- Safety according to EN 61347-1, 61347-2-3
  61347-2-13, 62384

Model List

Model Number	Input Voltage Range	Output Power	Output Voltage	Output Current Min	Output Current Max	Certification
BSR-030-V024-XYZ	90 ~ 305 Vac	30 W	24Vdc	0	1.25A	UL/FCC/CB/ENEC/CCC
BSR-030-V048-XYZ	90 ~ 305 Vac	30 W	48Vdc	0	0.67A	UL/FCC/CB/ENEC/CCC

XY=	Dimming Method	Programmable	12Vaux	Dim-off Power
NN	-	-	-	-
DN	0-10V	-	-	<1.5W
AN	DALI2.0	-	-	<1.5W

Z: C, Class I input; E, Class II Input

Technical Data

Input Voltage	90～305Vac or 127V-250Vdc
Input Frequency	47～63Hz
Power Factor	>0.9@60-100%load, refer to PF vs. Load curve
THD	<15%@60-100%load, refer to THD vs. Load curve
Input Current	0.38 Amax@120Vac & Full-Load, 0.21 Amax@220Vac & Full-Load
Inrush Current	2A peak, 0.2ms duration, <0.025A2s@230Vac, Cold Start 4A peak, 0.3ms duration, <0. 05A2s@277Vac, Cold Start
Leakage Current	1mA max @277Vac 60Hz, UL8750, 0.75mAmax @220Vac 50Hz, IEC61347-1
Input Under Voltage	Shut down and auto-recovery
Surge Protection	Line to line 2kV, line to ground 4kV, IEC 61000-4-5
Voltage Accuracy	±3%Vo
Ripple Current	Ip-p:5%Vo max
Setup Time	1.2s max
Overshoot	10% Vo, max.
Output Over Voltage	120% Io, typ.
Short Circuit	Auto recovery. The output recovers when short is removed.
Over Temperature	Lower the output current when Tc≧105±10℃; Auto Recovery When Tc≦70±10℃
Auxiliary Power (Vaux)	-
Operating Temperature	Case Temperature Tc=-30℃~+90℃； 10%RH～100%RH
Storage Temperature	-30℃～+85℃； 5%RH～100%RH
MTBF	≥350,000 hours, 75℃ case temperature (MIL-HDBK-217F)
Lifetime	≥100,000 hours, 75℃ case temperature, refer to life vs. Tc curve
Case Temperature	90℃ max, marked in the Tc point of label
Dimensions	14.88x1.18x0.82 by inch
	378 x 30 x 21 by mm
Net Weight	330g
Packing	See Package Information Section in the datasheet

Notes: Unless specified, all the test results are measured in 25℃ room temperature.

* marked items are optional and contact with sales people to get the functions.

Safety/EMC Compliance

Safety Standard	Description
UL8750	Light emitting diode(LED) equipment for use in lighting products
UL1012/1310	Power units other than class 2 / Class 2 power units
IEC 61347-1	Lamp control gear Part 1: general and safety requirements
IEC 61347-2-13	Lamp control gear Part 2-13: particular requirement for d.c. or a.c. supplied electronic control gear for LED modules
EMI Standards	Description
IEC 55015	Conducted emission test & radiated emission test
IEC 61000-3-2	Harmonic current emissions; Class C
IEC 61000-3-3	Voltage fluctuations & flicker
FCC Part 15	ANSI C63.4:2009 Class B
EMS Standards	Description
IEC 61000-4-2	Electrostatic discharge (ESD): 8 kV air discharge, 4 kV contact discharge
IEC 61000-4-3	Radio frequency electromagnetic field susceptibility test (RS)
IEC 61000-4-4	Electrical fast transient (EFT)
IEC 61000-4-5	Surge immunity test
IEC 61000-4-6	Conducted radio frequency disturbances test (CS)
IEC 61000-4-8	Power frequency magnetic field test
IEC 61000-4-11	Voltage dips
IEC 61547	Electromagnetic immunity requirements applies to lighting equipment

Dimming

Parameter	Min.	Typ.	Max.
Vdim Sourcing Current	100uA	150uA	200uA
Vdim Allowed Input Voltage	-20 V		20 V
0-10V Dimming Range	10% (Vdim=1V)	Linear	100% (Vdim=9~10V)
PWM Dimming Range	10% (Duty=10%)	Linear	100% (Duty=90-100%)
Dim off threshold	0.4V or 4%	0.5V or 5%	0.6V or 6%
Dim on threshold	0.6V or 6%	0.7V or 7%	0.8V or 8%
PWM High	3.8V		10V
PWM Low	0V		0.6V
PWM Frequency	300Hz		2kHz
External PWM Controller Current Sinking Capability	300uA		
DALI Interface Standard	IEC62386, part 101,102,207		
DA1,DA2 High Level	9.5	16	22.5
DA1,DA2 Low Level	-6.5	0	6.5
DA1,DA2 Current	0		2mA

Dimming Curve

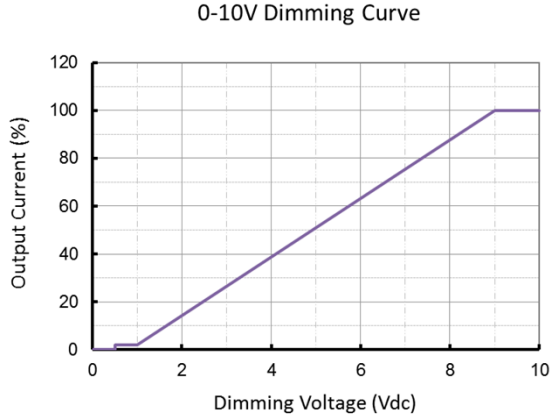

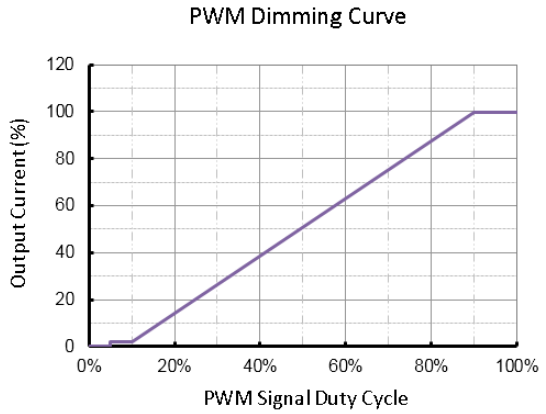

Dimming Wiring

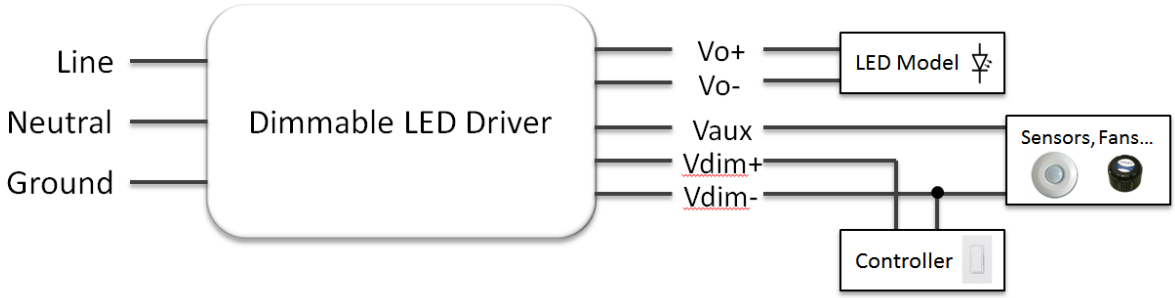

Push (Switch) Dim

A short press (50-600 ms) switches the device on or off

A long press (> 600 ms) fades the connected operating device alternately up and down (between 2 and 100%).

Up and down slew rate is 20%Io/second.

Long push for 15s to synchronize.

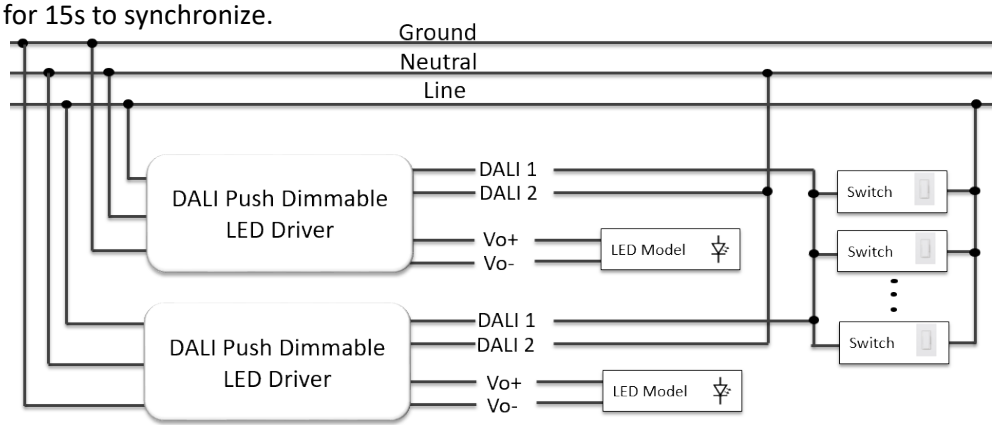

■ Lifetime vs. Case Temperature

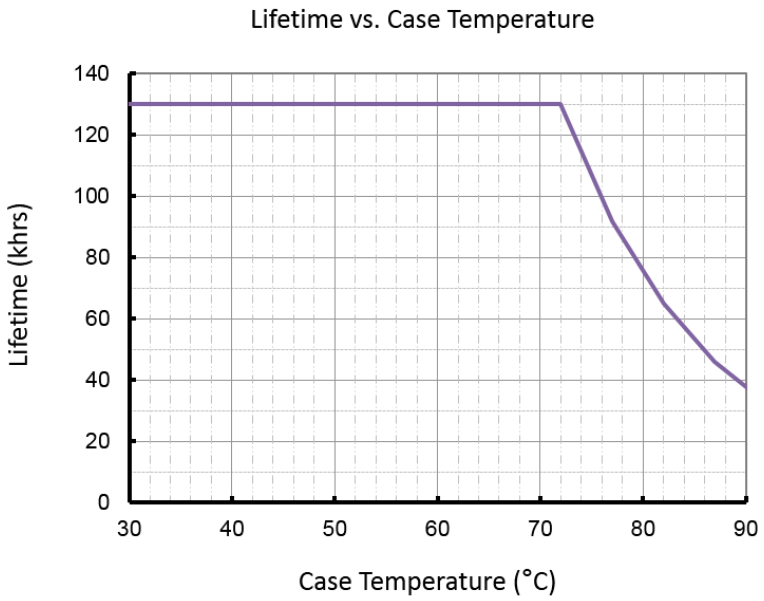

(End of Life: Maximum Failure Rate=10%)

■ Power Factor vs. Load

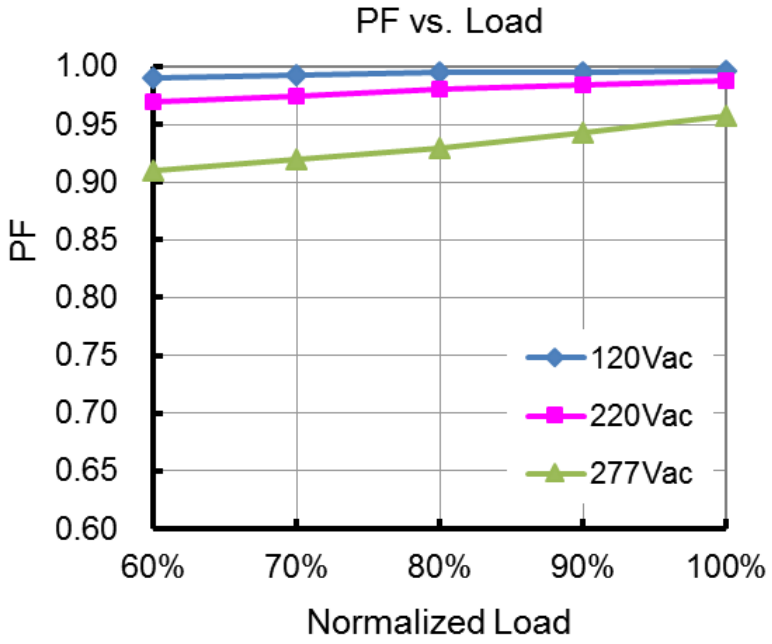

■ THD vs. Load

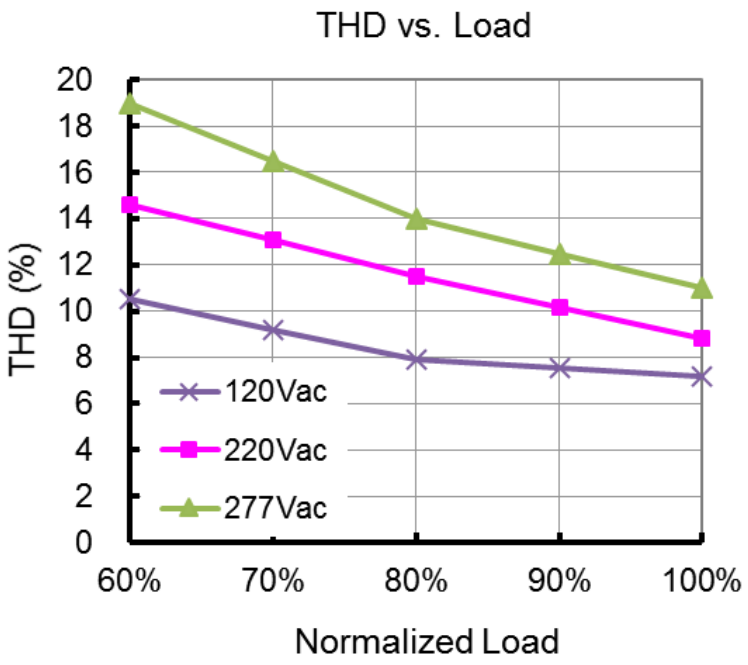

■ Efficiency vs. Load (24V Model)

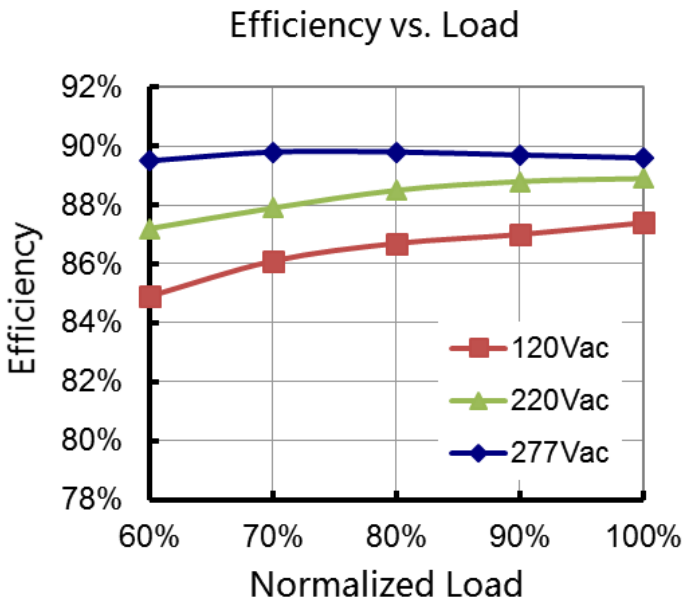

Dielectric Strength

Unit: Vac	Input	Output	Dimming	Case
Input	-	3750	3750	1554
Output	3750	-	-	1554
Dimming	3750	-	-	1554
Case	1554	1554	1554	-

Tc Point

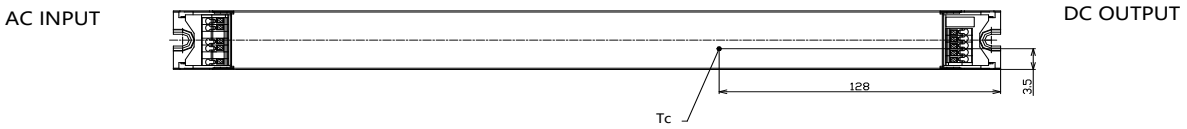

Packaging Information

Typical Carton Dimension(L×W×H)	490×370×140 mm
Positioning plate	4pcs/carton
Shield Board	1pcs/carton
LED Drivers	32pcs/carton

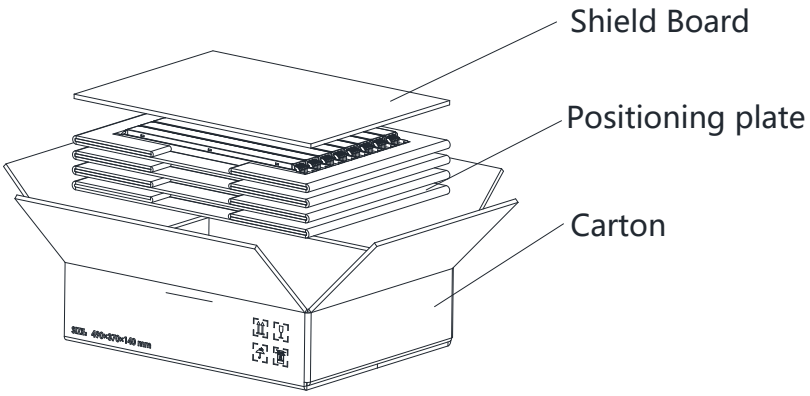

Mechanical Design

BSR-030-Vxxx-NNC/E

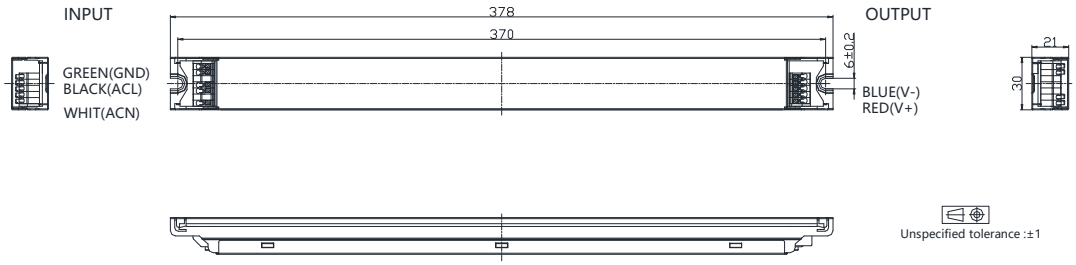

BSR-030-Vxxx-DNC/E

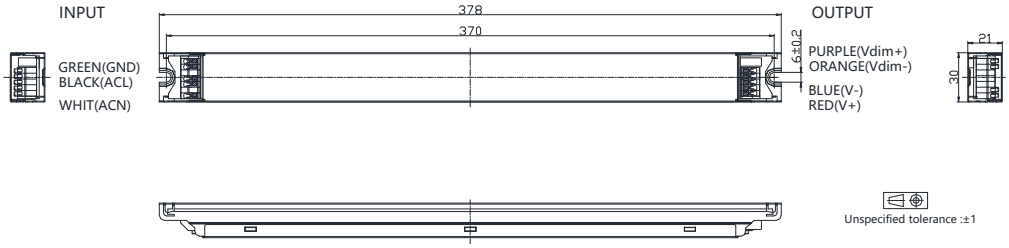

BSR-030-Vxxx-ANC/E

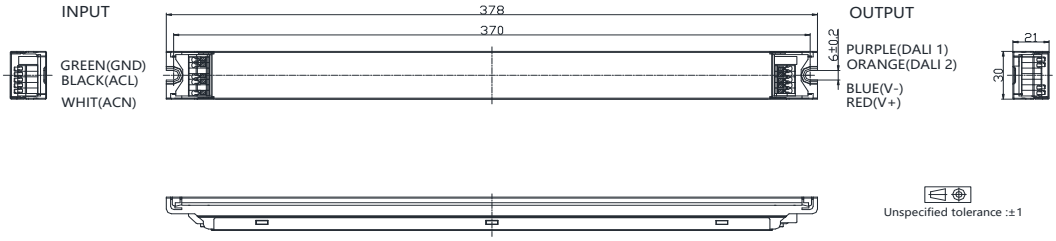

Revision History

Revision	Date	Contents
B	2022-03-22	1. Index page added 2. Reduced dimming interface sourcing current 3. DALI 2.0 compatibility added 4. Programming instruction added 5. Inrush current data added 6. Tc point position indication added 7. Dielectric strength level added 8. Packaging information added 9. Mechanical design change with dimming cable color 10. Revision history added
C	2022-08-22	1. Mechanical design updated