60W, 100-277Vac Input Constant Voltage LED Driver

Features

- Supply Voltage: 90-305Vac or 127-420Vdc, 380Vac for 2 hours
- Great Surge Immunity 10kV
- PWM Output Frequency >1kHz
- 100,000Hour Life @ Tc=75℃
- 7 Year Warranty @ Tc<=75℃
- 0-10V/PWM/DALI /Push (Switch) /DMX (RDM) Dimmable
- 2% Minimum Dimming Output
- Dim Off with 0.5W Standby
- 12V 300mA Auxiliary Power to Power Controllers and Fans (Optional)
- Input Over Voltage Protection (Optional)
- Class II Model Available
- UL Class P, ENEC/CB/CCC SELV Output
- Safety according to EN 61347-1, 61347-2-3 61347-2-13, 62384

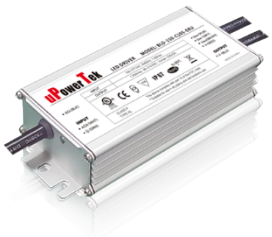

Application

- Strip lights, Landscape lights, Bay lights, Street lights, Tunnel lights, Flood lights

Model List

Model Number	Input Voltage Range	Output Power	Output Voltage	Output Current Min	Output Current Max	Certification
BLD-060-V012-XYZ	90 ~ 305 Vac	60 W	12V	0	5A	UL/FCC/CB/ENEC/ CCC/BIS/RCM/PSE
BLD-060-V024-XYZ	90 ~ 305 Vac	60 W	24V	0	2.5A	
BLD-060-V048-XYZ	90 ~ 305 Vac	60 W	48V	0	1.3A	

XY=	Dimming Method	Programmable	12Vaux	Dim-off Power
NN	-	-	-	-
DN	0-10V	-	-	<1.5W
EN	0-10V	-	√	<0.5W
AN	DALI	-	-	<1.5W
MR	DMX	Set Address	-	<1.5W

Z = U, UL cable with ground wire S, VDE cable/Class I D, VDE cable/Class II

Note: Dimmable Drivers Do NOT Support Switching DCDC Regulator as Load

July 10, 2018, All rights reserved.

■ Technical Data

Input Voltage	90～305Vac or 127V-420Vdc, 380Vac for 2 hours
Input Frequency	47～63Hz
Power Factor	>0.9@60-100%load, refer to PF vs. Load curve
THD	<15%@60-100%load, refer to THD vs. Load curve
Input Current	0.58 Amax@120Vac & Full-Load, 0.31Amax@220Vac & Full-Load
Inrush Current	65A peak, 1.2ms duration, <0.25A2s@230Vac, Cold Start 70A peak, 1.3ms duration, <0. 5A2s@277Vac, Cold Start
Leakage Current	1mA max @277Vac 60Hz, UL8750,0.75mAmax @060Vac 50Hz, IEC61347-1
Input Under Voltage	Shut down and auto-restart
Input Over Voltage	*Optional: Shutdown @320Vac
Surge Protection	Line to line 6kV, line to ground 10kV, IEC 61000-4-5
Voltage Accuracy	±3%Vo
Setup Time	1.2s max.
Overshoot	10% Vo, max.
Output Over Current	120% Io, typ.
Short Circuit	Auto recovery. The output recovers when short is removed.
Over Temperature	Turn off the output when Tc≧105±10℃; Auto Recovery When Tc≦70±10℃
Operating Temperature	Case Temperature Tc=-40℃~+90℃； 10%RH～100%RH
Storage Temperature	-40℃～+85℃； 5%RH～100%RH
MTBF	≥320,000 hours, 75℃ case temperature (MIL-HDBK-217F)
Lifetime	≥100,000 hours, 75℃ case temperature, refer to life vs. Tc curve
Case Temperature	90℃ max, marked in the Tc point of label
Dimensions	5.16x2.66x1.32 by inch (body), 6.22x2.66x1.32 by inch (endcaps included)
	131.0x67.5x33.5 by mm (body), 158.0x67.5x33.5 by mm (endcaps included)
Net Weight	650g
Packing	25pcs/Carton/17.3kg, 490x370x230mm

Notes: Unless specified, all the test results are measured in 25℃ room temperature.

■ Dimming

Parameter	Min.	Typ.	Max.
Vdim Sourcing Current	200uA	300uA	450uA
Vdim Allowed Input Voltage	-20 V		20 V
0-10V Dimming Range	2% (Vdim=1V)	Linear	100% (Vdim=9~10V)
PWM Dimming Range	2% (Duty=10%)	Linear	100% (Duty=90-100%)
Dim off threshold	0.4V or 4%	0.5V or 5%	0.6V or 6%
Dim on threshold	0.6V or 6%	0.7V or 7%	0.8V or 8%
PWM High	3.8V		10V
PWM Low	0V		0.6V
PWM Frequency	300Hz		2kHz

July 10, 2018, All rights reserved.

External PWM Controller Current Sinking Capability	300uA		
DALI Interface Standard		IEC62386	
DA1,DA2 High Level	9.5	16	22.5
DA1,DA2 Low Level	-6.5	0	6.5
DA1,DA2 Current	0		2mA

Dimming Curve

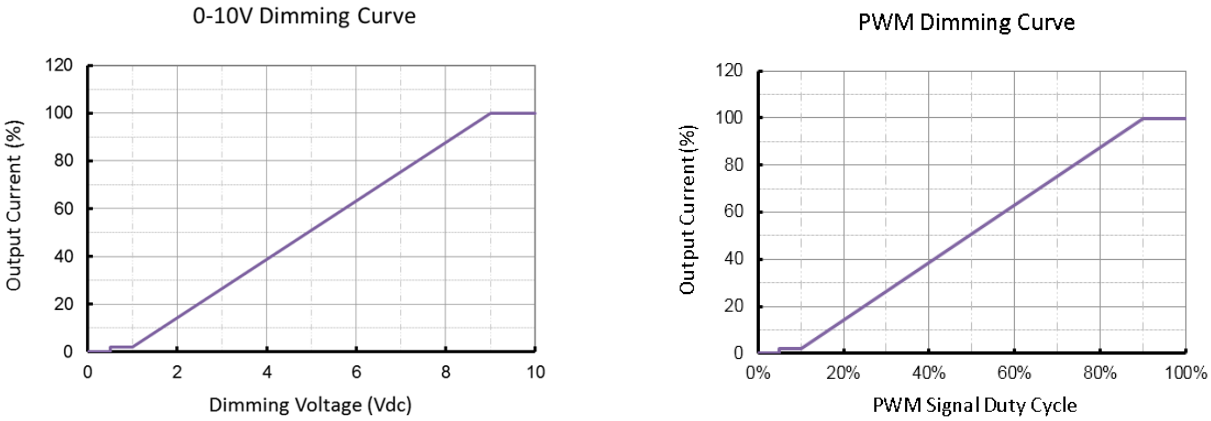

Dimming Wiring

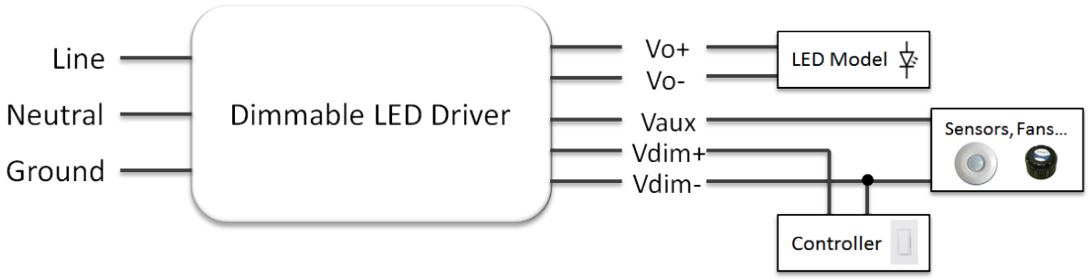

Push (Switch) Dim

A short press (50-600 ms) switches the device on or off

A long press (> 600 ms) fades the connected operating device alternately up and down (between 2 and 100%).

Up and down slew rate is 20%Io/second.

Long push for 15s to synchronize.

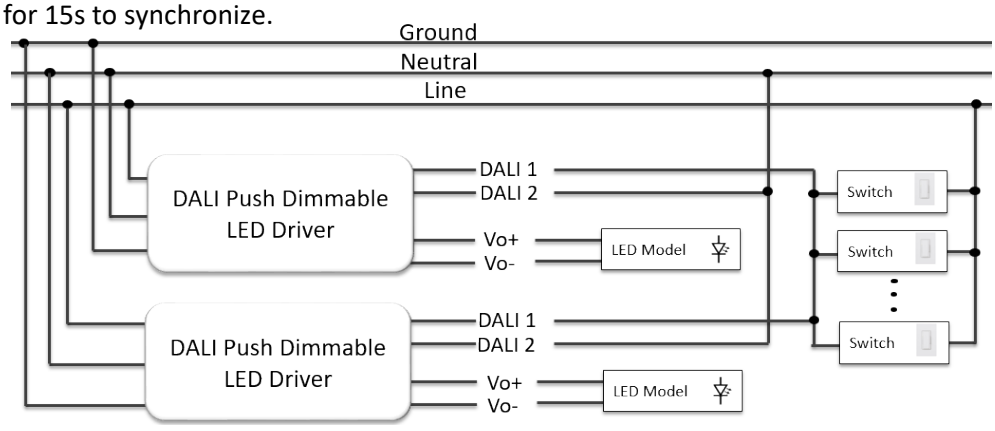

July 10, 2018, All rights reserved.

■ Safety/EMC Compliance

Safety Standard	Description
UL8750	Light emitting diode(LED) equipment for use in lighting products
UL1310	Class 2 power units
IEC 61347-1	Lamp control gear Part 1: general and safety requirements
IEC 61347-2-13	Lamp control gear Part 2-13: particular requirement for d.c. or a.c. supplied electronic control gear for LED modules
EMI Standards	Description
IEC 55015	Conducted emission test & radiated emission test
IEC 61000-3-2	Harmonic current emissions; Class C
IEC 61000-3-3	Voltage fluctuations & flicker
FCC Part 15	ANSI C63.4:2009 Class B
EMS Standards	Description
IEC 61000-4-2	Electrostatic discharge (ESD): 8 kV air discharge, 4 kV contact discharge
IEC 61000-4-3	Radio frequency electromagnetic field susceptibility test (RS)
IEC 61000-4-4	Electrical fast transient (EFT)
IEC 61000-4-5	Surge immunity test
IEC 61000-4-6	Conducted radio frequency disturbances test (CS)
IEC 61000-4-8	Power frequency magnetic field test
IEC 61000-4-11	Voltage dips
IEC 61547	Electromagnetic immunity requirements applies to lighting equipment

■ Lifetime vs. Case Temperature

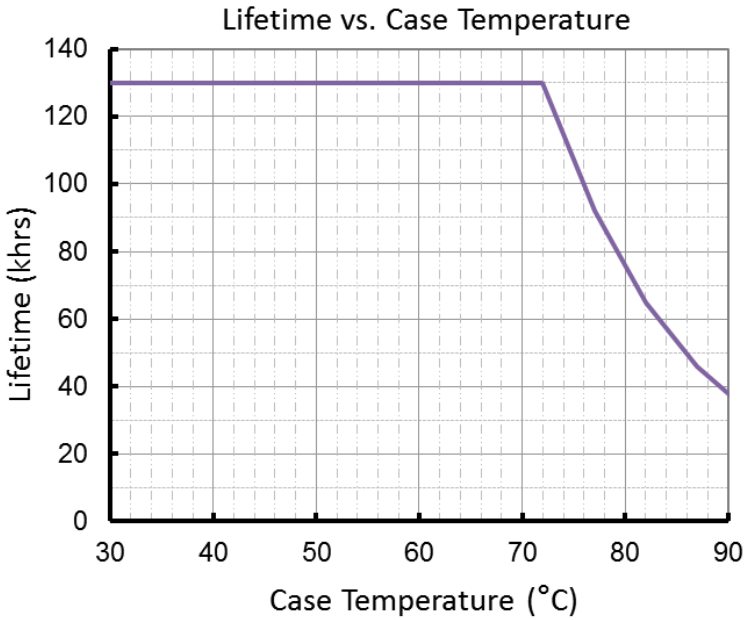

(End of Life: Maximum Failure Rate=10%)

July 10, 2018, All rights reserved.

■ Power Factor vs. Load

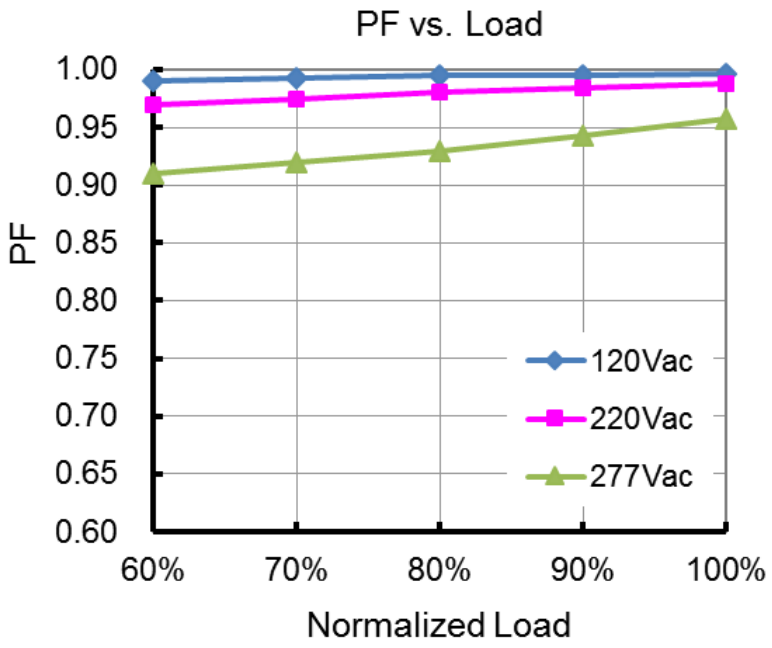

■ THD vs. Load

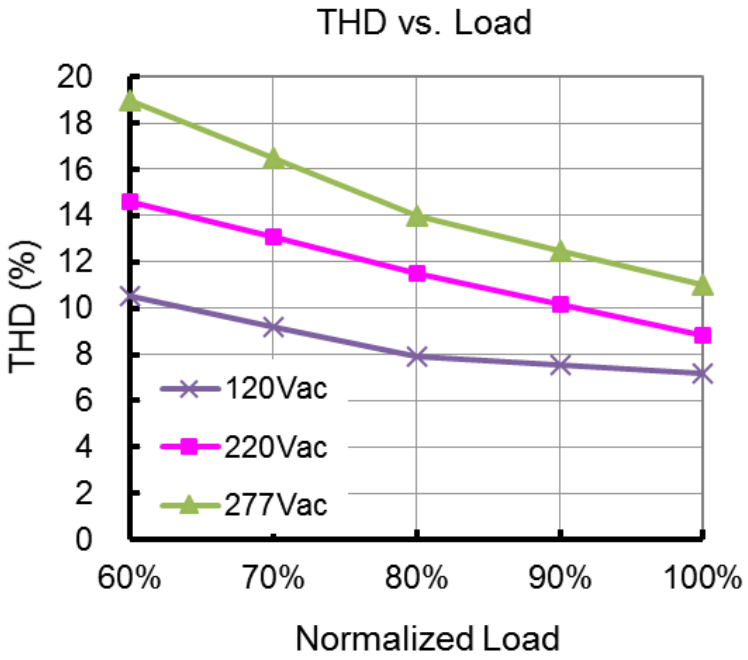

July 10, 2018, All rights reserved.

■ Efficiency vs. Load (24V Model)

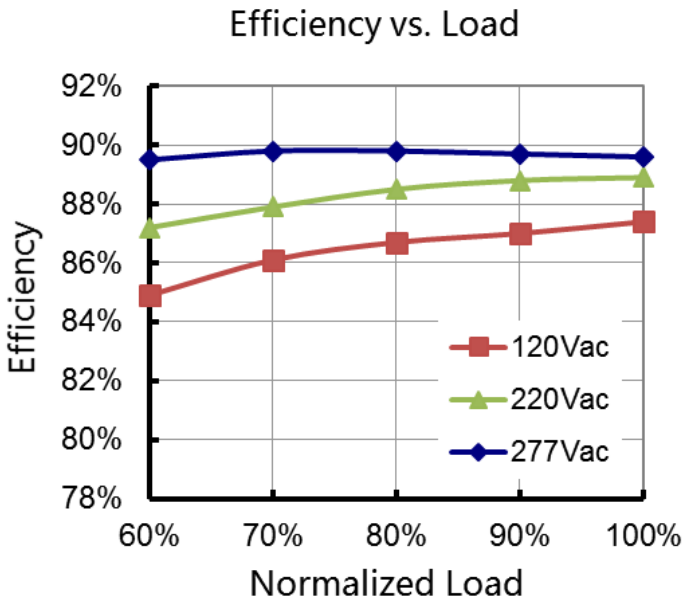

July 10, 2018, All rights reserved.

■ Mechanical Design

- **BLD-060-Vxxx-NNU (UL Cable)**

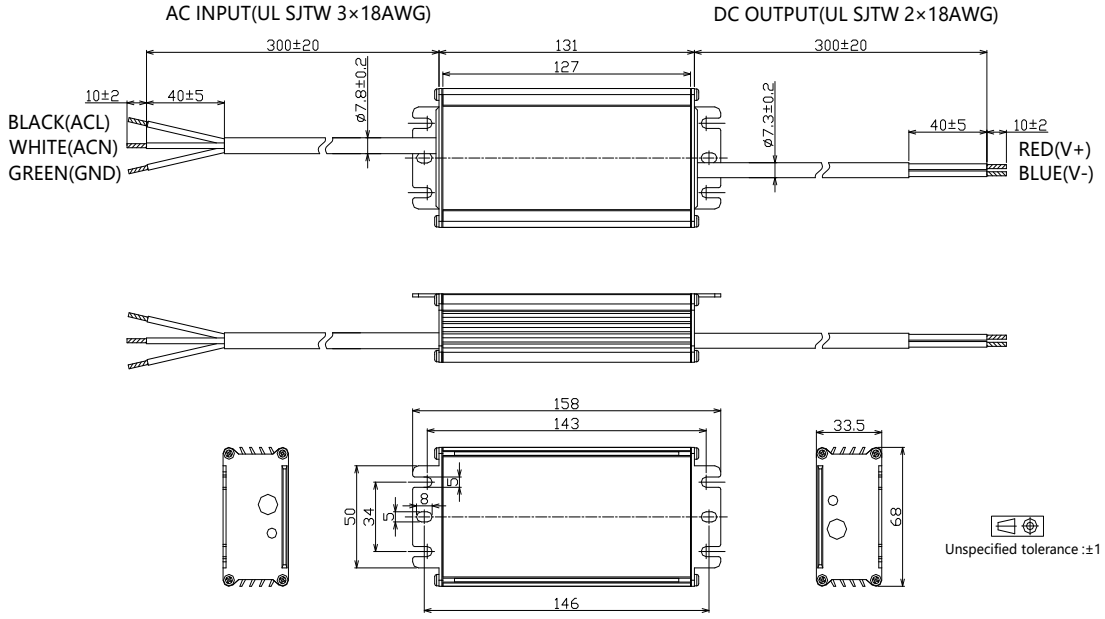

- **BLD-060-Vxxx-DNU (UL Cable)**

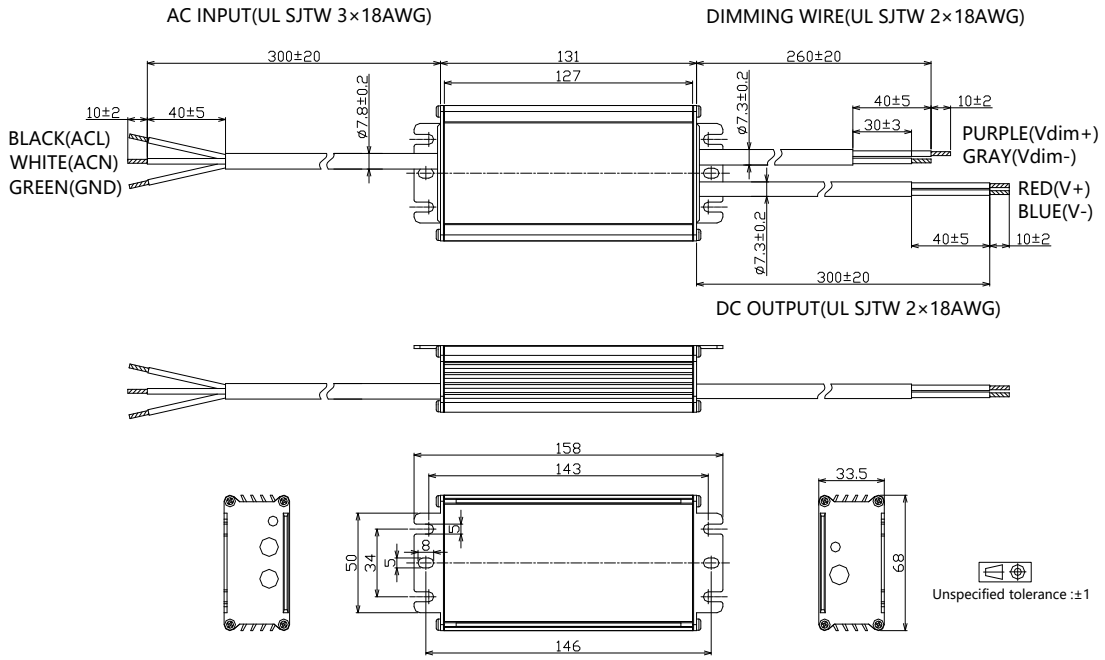

- **BLD-060-Vxxx-ENU (UL Cable)**

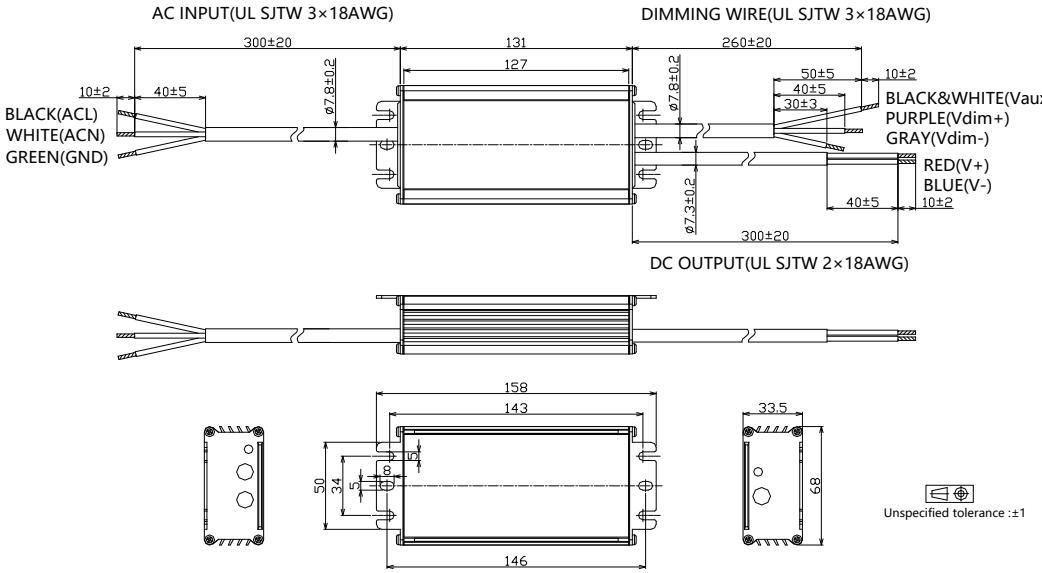

- **BLD-060-Vxxx-ANU (UL Cable)**

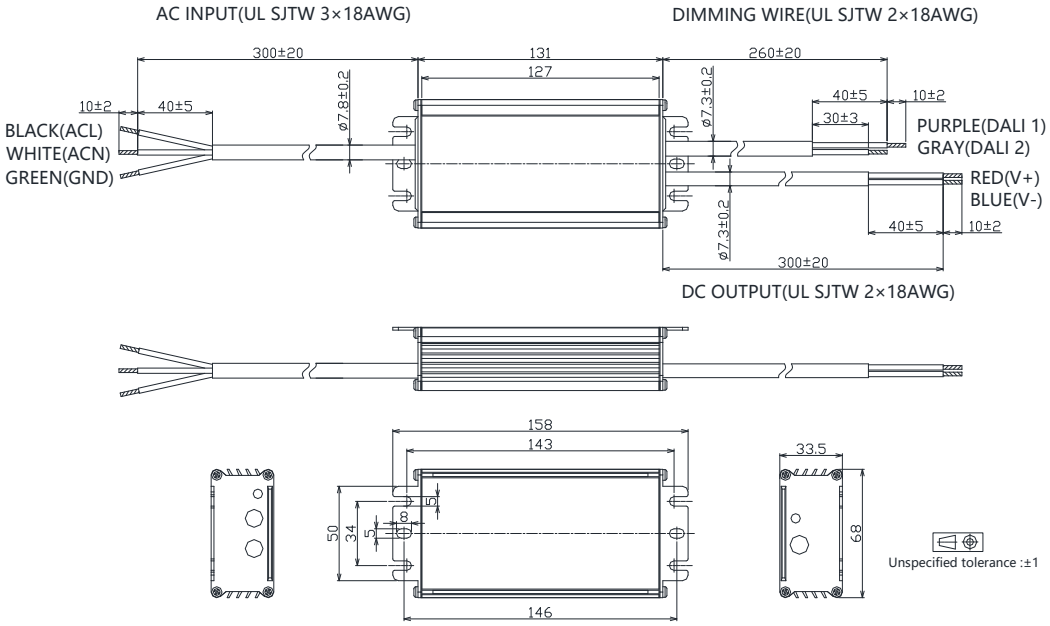

- **BLD-060-Vxxx-MRU (UL Cable)**

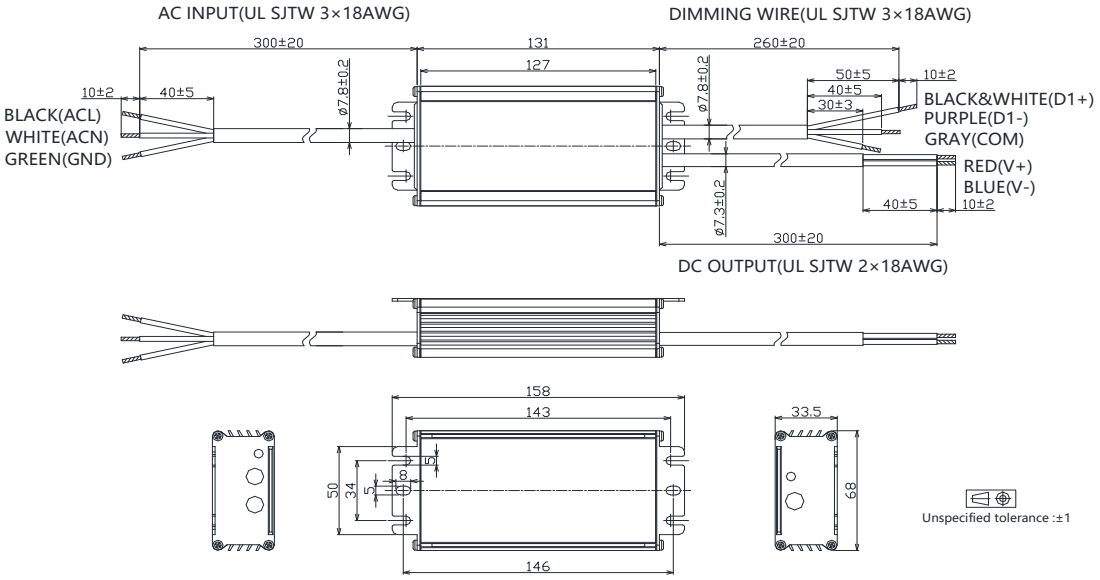

- **BLD-060-Vxxx-NNS (VDE Cable)**

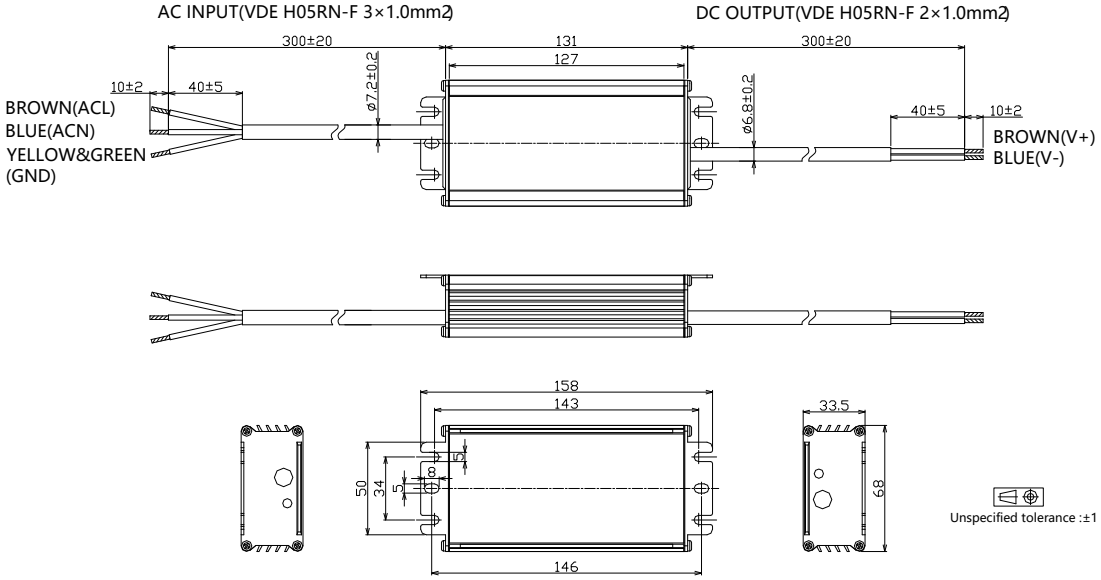

- **BLD-060-Vxxx-DNS (VDE Cable)**

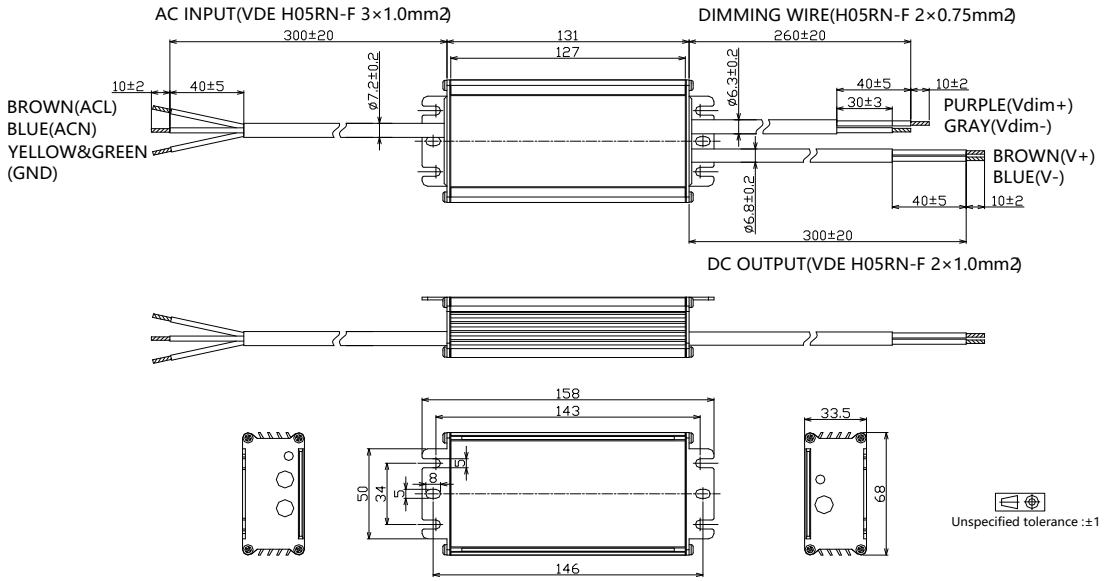

- **BLD-060-Vxxx-ENS (VDE Cable)**

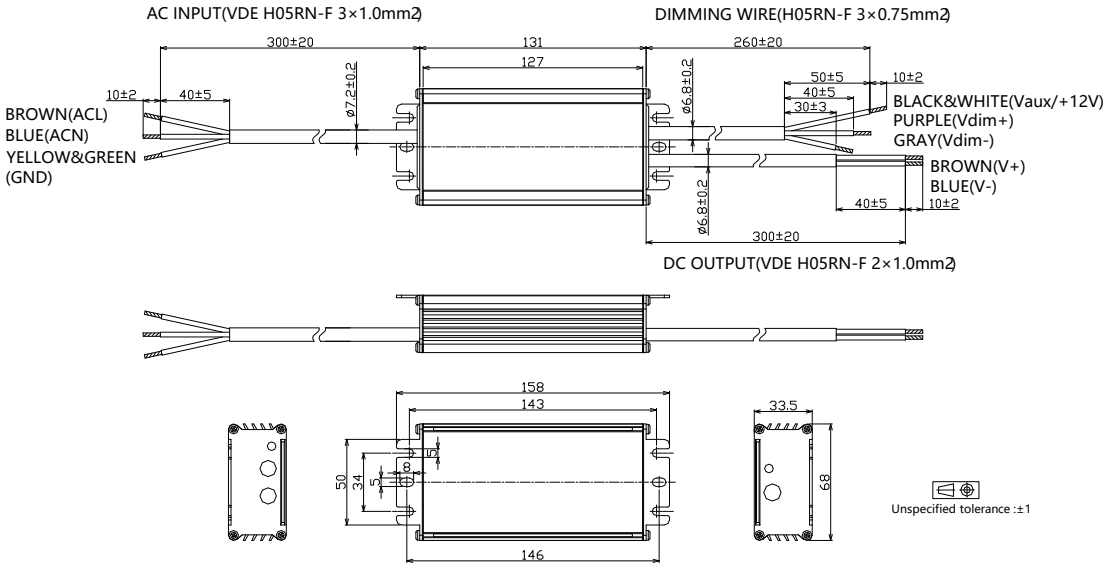

July 10, 2018, All rights reserved.

- **BLD-060-Vxxx-ANS (VDE Cable)**

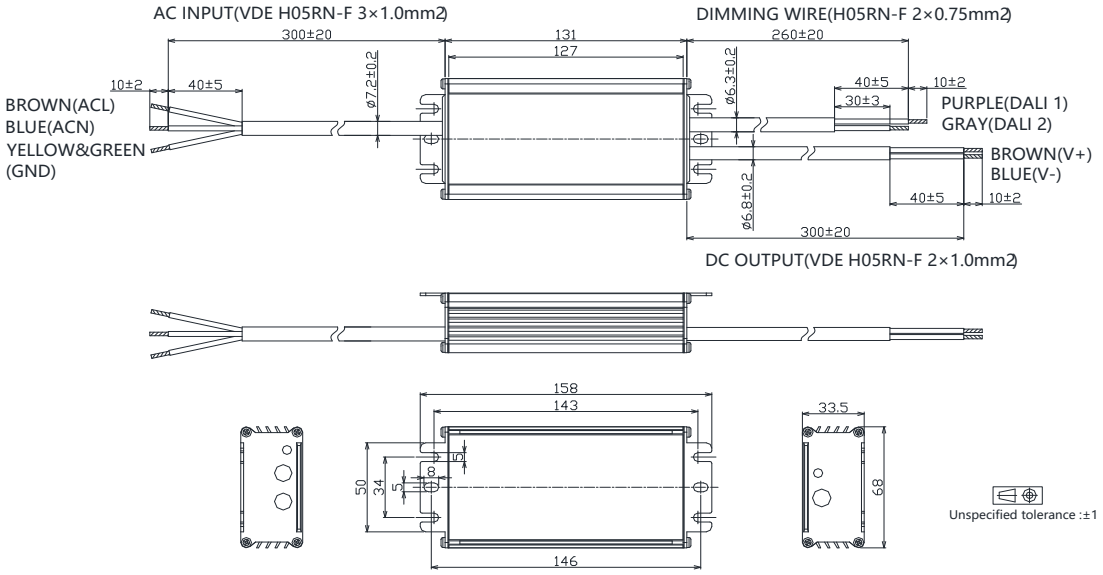
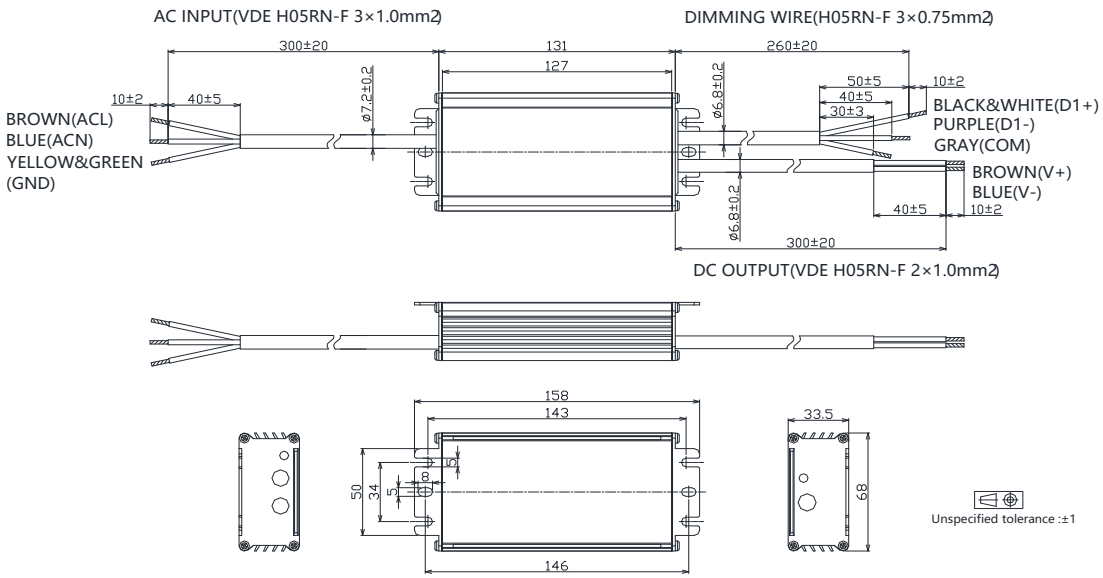
- **BLD-060-Vxxx-MRS (VDE Cable)**